MDR-60 Single output series



DIMENSION：40*90*100mm

Features:

- Universal AC input/Full range
- Protections: Short circuit/Overload/Over voltage
- Cooling by free air convection
- Built-in EMI filter with minimal Bellows
- Can work continuously for 4300 hours at 25℃
- 100% full load burn-in test
- Complay with IEC/EN68335-1(PD3) and IEC/EN61558-1,2-16 IEC/EN61558-1,2-16 suittable for household appliance apps
- 3-year quality assurance (two replacement per year, free maintenance for two years)

SPECIFICATION

ISO9001:4008

MODEL		MDR-60-12	MDR-60-24	MDR-60-36	MDR-60-48
OUTPUT	DC VOLTAGE	12V	24V	36V	48V
	RATED CURRENT	5A	2.5A	1.7A	1.25A
	CURRENT RANGE	0 ~ 5A	0 ~ 2.5A	0 ~ 1.7A	0 ~ 1.25A
	RATED POWER	60W	60W	60W	60W
	RIPPLE&NOISE(Max.) Note.2	120mVp-p	150mVp-p	150mVp-p	180mVp-p
	VOLTAGE ADJ. RANGE	10.8 ~ 13.2V	21.6 ~ 26.4V	32.4 ~ 39.6V	43.2 ~ 52.8V
	VOTAGE TOLERANCE Note.3	±1.0%	±1.0%	±1.0%	±1.0%
	LINE REGULATION	±1.0%	±1.0%	±0.2%	±0.2%
	LOAD REGULATION	±1.0%	±1.0%	±0.5%	±0.5%
	SETUP, RISE TIME Note.5	500ms,30ms/230VAC 1000ms,30ms/115VAC (at full load)			
	HOLD UP TIME (Typ.)	50ms/230VAC 20ms/115VAC(at full load)			
INPUT	VOLTAGE RANGE Note.4	85~264VAC or 120~370VDC			
	FREQUENCY RANGE	47~63Hz			
	EFFICIENCY(Typ.)	76%	80%	81%	84%
	AC CURRENT(Typ.)	0.55A/115VAC 0.35A/230VAC			
	INRUSH CURRENT(Typ.)	COLD START 20A/115VAC 40A/230VAC			
	LEAKAGE CURRENT	<1mA/240VAC			
PROTECTION	OVERLOAD	105 ~ 160% rated output power			
		Protection type : Hiccup mode , recovers automatically after fault condition is removed			
	OVER VOLTAGE	13.8~ 16.2V	28.5 ~ 33.8V	41.4 ~ 48.6V	55.2 ~ 64.8V
		Protection type: Shut down o/p voltage , recovers automatically after fault condition is removed			
FUNCTION	DC OK SIGNAL	Relay contact rating(max.):30V/1A resistive			
ENVIRONMENT	WORKING TEMP.	-20~ +70℃ (Refer to "Derating Curve")			
	WORKING HUMDITY	20 ~ 90% RH non-condensing			
	STORAGE TEMP.,HUMIDITY	-20 ~ +85℃ , 10 ~ 90% RH			
	TEMP. COEFFICIENT	±0.03%/℃ (0 ~ 50℃)			
	VIBRATION	Component:10~500Hz, 2G 10min./1cycle, 60min. each along X,Y,Z axes; Mounting: Compliance to IEC60068-2-6			
SFAETY & EMC	SAFETY STANDARDS	Complay with CE and GB4943.1 safety standards			
	WITHSTAND VOLTAGE	I/P-O/P:2KVAC 1minute I/P-FG:2KVAC 1minute O/P-PG:0.5KVAC 1minute			
	ISOLATION RESISTANCE	I/P-O/P,I/P-FG,O/P-FG： 100M Ohms/500VDC			
	EMC EMISSION	EN61000-3-2:2014/EN61000-3-3:2013			
	EMC IMMUNITY	EN 55032:2015/EN55035:2017/60950-1			
OTHERS	MTBF	≥299.2k hrs min. MIL-HDBK-217F(25℃)			
	DIMENSION	40*90*100mm(W*H*D)			
	PACKING	0.25Kg			
NOTE	1. All parameters NOT specially mentioned are measured at 230VAC input, rated load and 25℃ of ambient temperature. 2. Ripple & noise are measured at 20MHz of bandwidth by using a 12" twisted pair-wire terminated with a 0.1uf & 47uf parallel capacitor. 3. Tolerance : includes set up tolerance, line regulation and load regulation. 4. The output needs to be reduced under the condition of low input voltage, refer to the derating curve chart for details. 5. Length of set up time is measured at cold first start. Turning ON/OFF the power supply may increase of the set up time.				

MDR-60 Single output series

Mechanical Specification

Measurement unit: mm

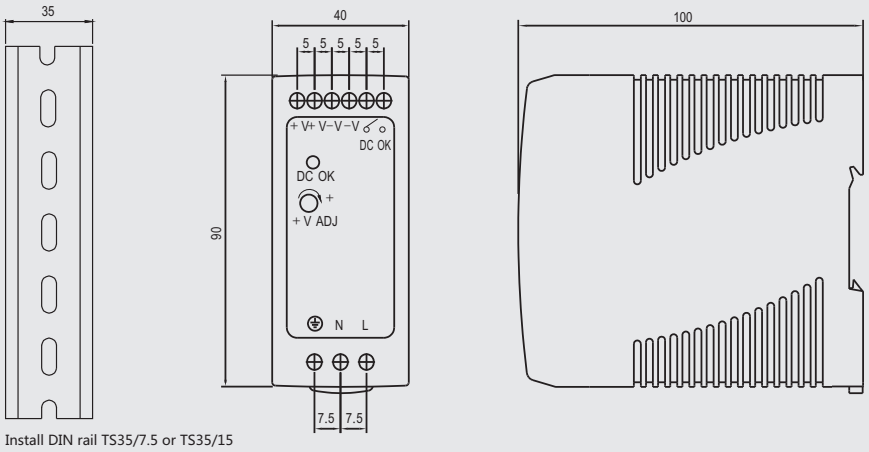

Install DIN rail TS35/7.5 or TS35/15

Block Diagram

fosc:60KHz

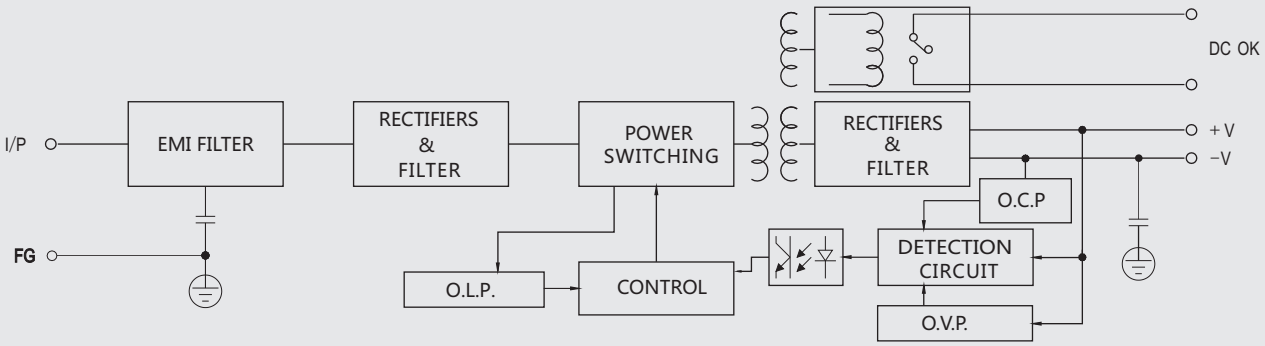

DC OK Relay Contact

Contact Close	PSU turns on/ DC OK.
Contact Open	PSU turns off/ DC Fail.
Contact Ratings (max.)	30V/1A resistive load.

Derating Curve

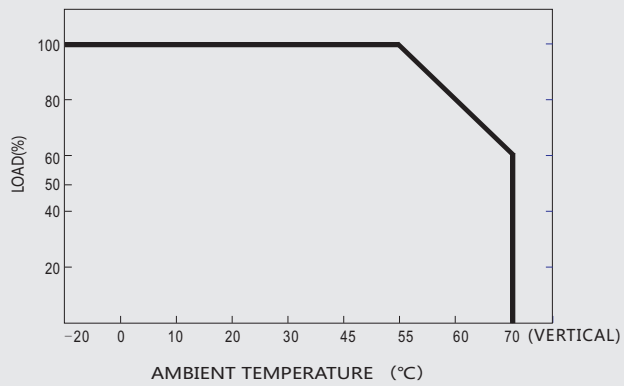

Output Derating VS Input Voltage

